DEMAGNETIZING A MAGNET

Magnets can be demagnetized in several ways:

1. By Heat. When a magnet is placed in a flame and heated until it is red hot, it becomes demagnetized.

2. By Contact. When one magnet is stroked by another magnet alternately in one direction and then the other, the stroked magnet becomes demagnetized. Note that this procedure is the opposite of the procedure used in making a magnet by stroking.

3. By Hammering or Jarring. When a magnet is repeatedly struck with a hammer or when it is struck against a table top or some other hard object, the magnet loses its magnetism. This can be shown as follows: First, pick up some paper clips with a magnet. Then remove the paper clips and strike the magnet solidly against a hard object four or five times. Now try to pick up the paper clips again. The clips are no longer attracted—the magnet has become demagnetized. The theory of magnetism explains what happens during demagnetization. Heating, rubbing, and hammering a magnet disturb the regular arrangement of magnetic domains—a necessary requirement for magnetism.

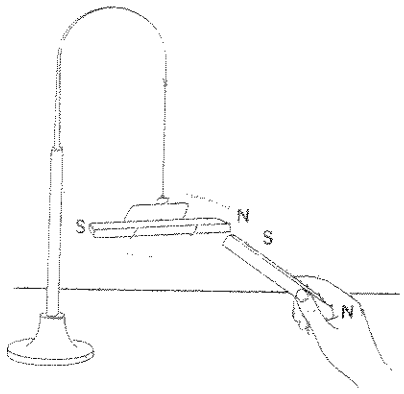

Opposite poles of magnets attract each other

Fig. 16-5. The law of magnetic poles.

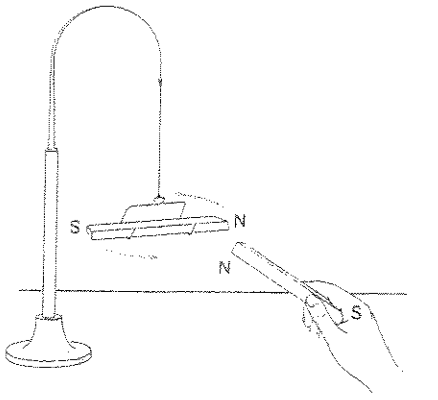

Like poles of magnets repel each other

LAW OF MAGNETIC POLES

As you noticed in the laboratory experience, iron filings tend to concentrate at the ends of a magnet. (We will study this property of a magnet in the next section.) It is at these ends, called **poles**, that the power of a magnet appears to be strongest. When a bar magnet is suspended horizontally by a string from a ring-stand, the magnet usually swings and then comes to rest in an approximate north-south position. The pole pointing toward the north is called the **north pole** of the magnet, while the pole pointing southward is called the **south pole** of the magnet.

When the north pole of a second magnet is brought close to the north pole of the suspended magnet, the two north poles repel each other. If the south pole of a magnet is brought close to the south pole of a suspended magnet, the two south poles also repel each other. On the other hand, when the south pole of a magnet is brought close to the north pole of the suspended magnet, the two poles attract each other (Fig. 16-5).

These observations are summarized in the **law of magnetic poles.** This law states that like poles of magnets repel each other and unlike poles of magnets attract each other. Note the similarity between this law and the law of electric charges studied earlier (see Chapter 15). In both cases, opposite charges or opposite poles attract each other and similar charges or similar poles repel each other.

Experiments indicate that the force of attraction between two unlike poles or the force of repulsion between two like poles depends upon the strength of the magnets and the distance between the poles. At a fixed distance, stronger magnets produce stronger attractions or stronger repulsions. With magnets of the same strength, the attractions or repulsions increase as the distance between the poles becomes shorter.

In calculating the attractive or repulsive forces between two magnets, the distance between poles has a more pronounced effect than does the strength of the magnets. If we double the strength of a magnet, we double the attractive or repulsive forces. If we double the distance between two unlike poles, the attractive force is decreased to one-fourth of its original strength. If we halve the distance between two unlike poles, the attractive force becomes four times greater than the original strength. This is why a bar magnet becomes stronger when bent in the form of a horseshoe. Bending the bar magnet brings the poles closer together.